# EXPERIMENT 9

# MOSFET AMPLIFIER & FREQUENCY RESPONSE

## 9.1 Objectives

In this experiment, MOSFET amplifier circuit will be examined. Voltage gain and frequency response of amplifier will be investigated as well.

## 9.2 Equipment List

1. DC Power Supply,
2. DSO,
3. Signal/Function Generator,
4. MOSFET (DC4007UBMS),
5. Resistors (270Ω, 1kΩ, 10kΩ, 560kΩ, 1MΩ)
6. Capacitors (3x1μF, 3x100μF)

## 9.3 Preliminary Work

1. Study MOSFET amplifiers and frequency response of an amplifier.
2. What are the resonant frequency (or center frequency), cut-off frequencies and bandwidth of a filter?

## 9.4 Experimental Procedure

1) Construct the circuit given in Fig. 1. with a sinusoidal input signal as $V_p = 1V$. Observe and ***record*** the signals at the input and at the output for given frequencies in Table 1. Also calculate voltage gain for each case. ***Record*** them into Table 1.

Table 1. Measured values for circuit in Fig. 1

| **Frequency** | **$V_i$** | **$V_o$** | **Gain ($A_V$)** |
|---|---|---|---|
| 100 Hz | | | |
| 1 kHz | | | |
| 10 kHz | | | |
| 100 kHz | | | |
| 1 MHz | | | |

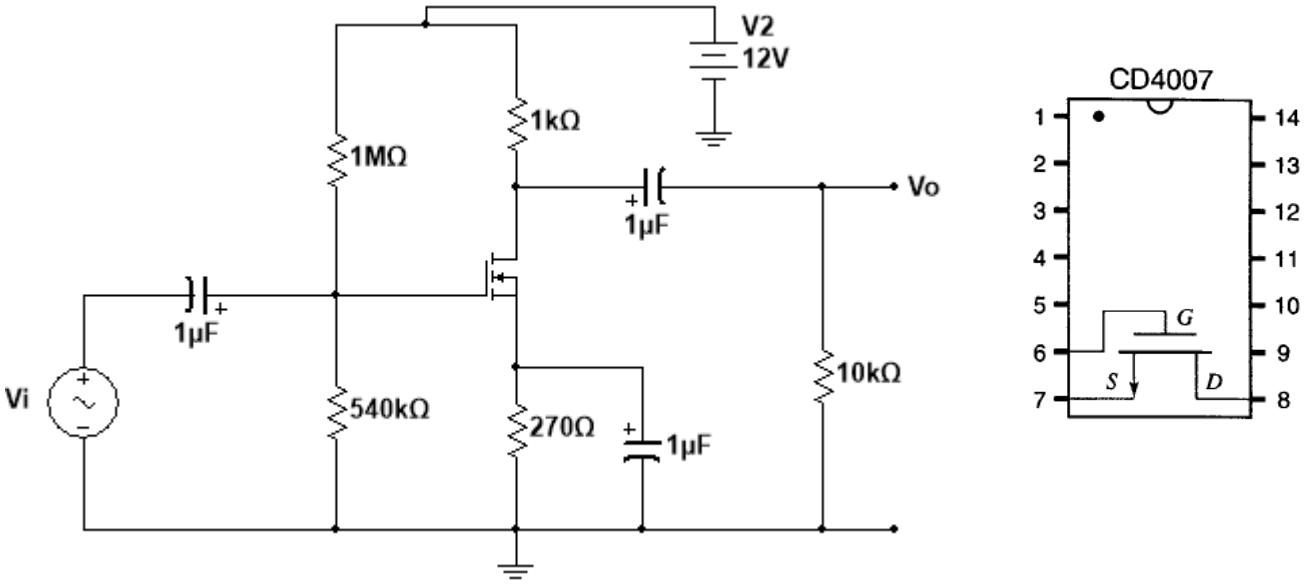


**Figure 1**

2) Find the lower and higher cut-off frequencies of the circuit experimentally by varying the frequency of the input signal. Record them into Table 2.

Table 2. Cut-off frequencies of the circuit in Fig. 1

| $f_L$ | $f_H$ | BW |
|---|---|---|
| | | |

3) Change all 1μF capacitors in Fig. 1 with 100μF ones and repeat step 1 and 2.

